BILL OF MATERIALS FOR FLOATING WATER INTAKE			
ITEM	SIZE	QUANTITY	LENGTH
End cap (S&D)*	6" dia.	1	3"
PVC pipe (S&D)	6" dia.	1	8"
Coupling (S&D)	6" dia.	1	6"
Coupling (S&D)	4" dia.	1	4"
PVC pipe (Sch. 40), concrete filled	2" dia.	1	19" min. to 24" max.
PVC tee (Sch. 40)	2" dia.	1	--
PVC 45° elbow (Sch. 40)	2" dia.	1	--
Bushing	6" to 4"	1	--
Bushing	4" to 2"	2	--
PVC to plastic adaptor	2" dia.	2	--
Drain grate	4" dia.	1	--
Soft flexible PVC pipe (1 pc.)	2" dia.	1	3' min.
Broken styrofoam	--	¼ cu. ft.	--

*(Sewer and Drain)

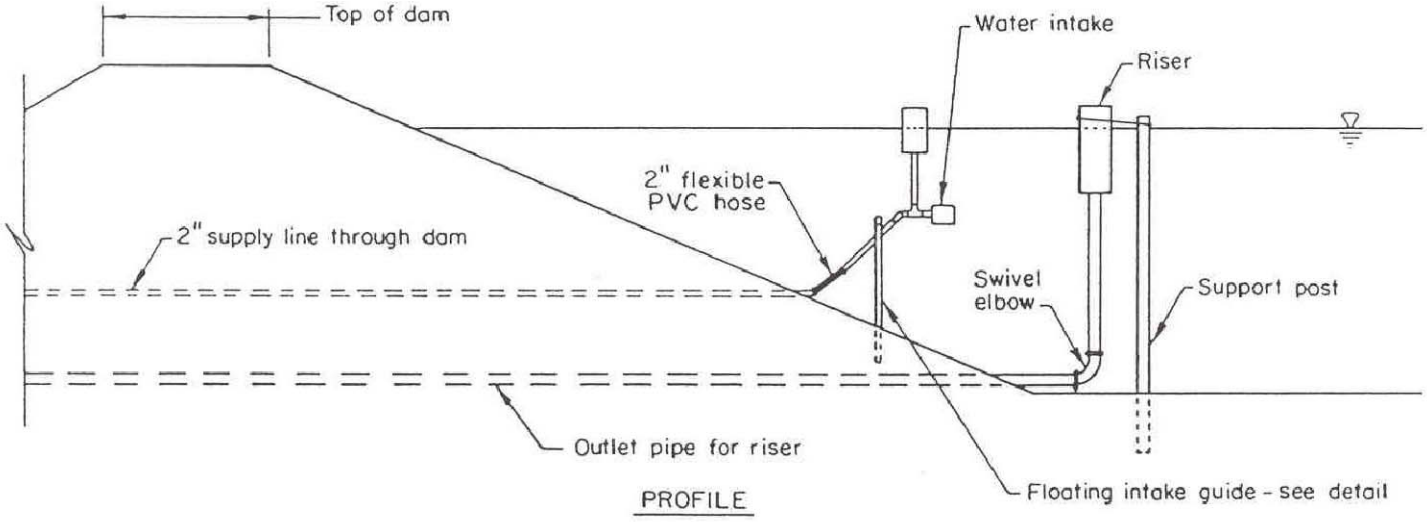

PROFILE

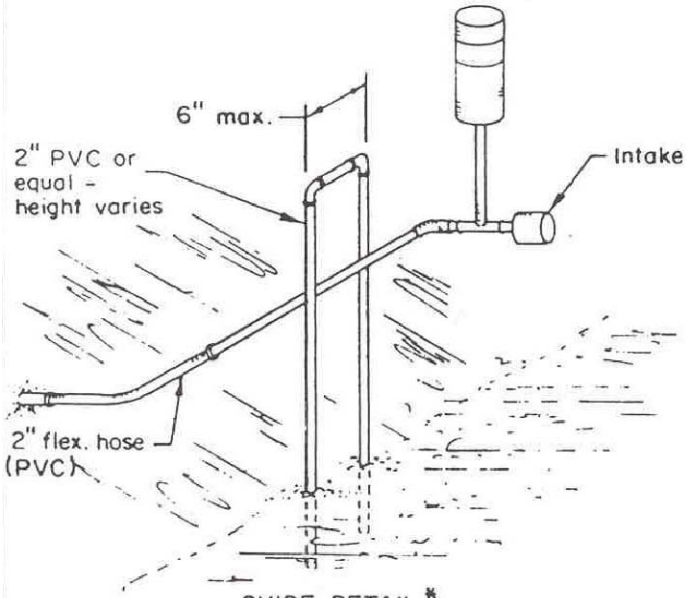

GUIDE DETAIL*

*Not included in Bill of materials

SHEET NO. 2 OF 2	DRAWING NO.	FLOATING WATER INTAKE DETAILS _____ COUNTY, ALABAMA U.S. DEPARTMENT OF AGRICULTURE NATURAL RESOURCES CONSERVATION SERVICE	Designed V. MCGUIRE 2/88 (DATE) Drawn NRCS, ALA. 2/88 Checked Approved

USDA
United States Department of Agriculture